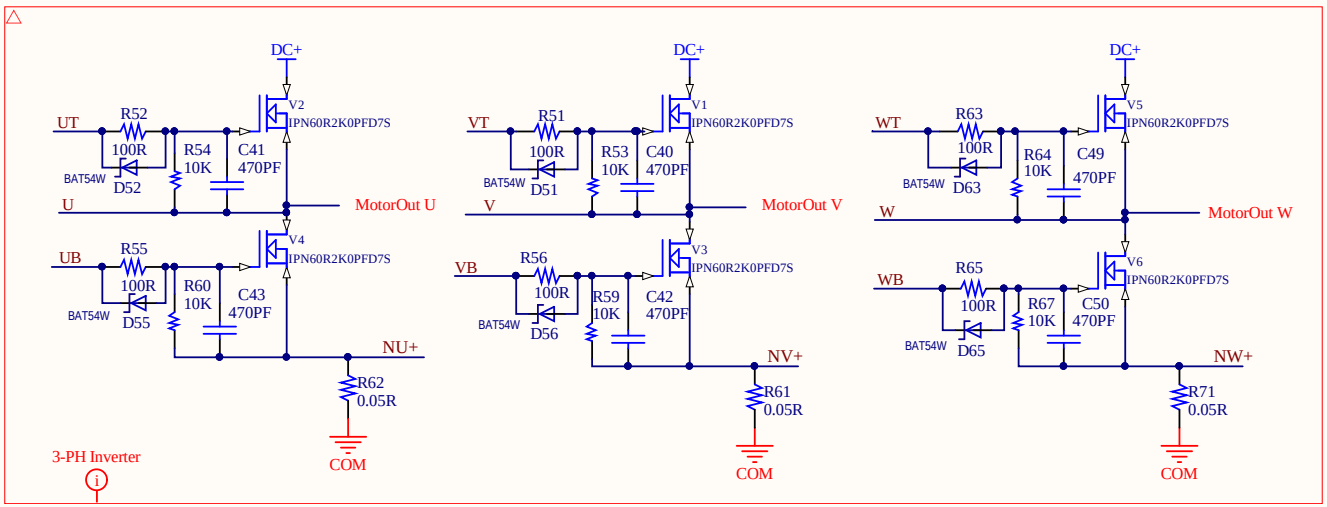

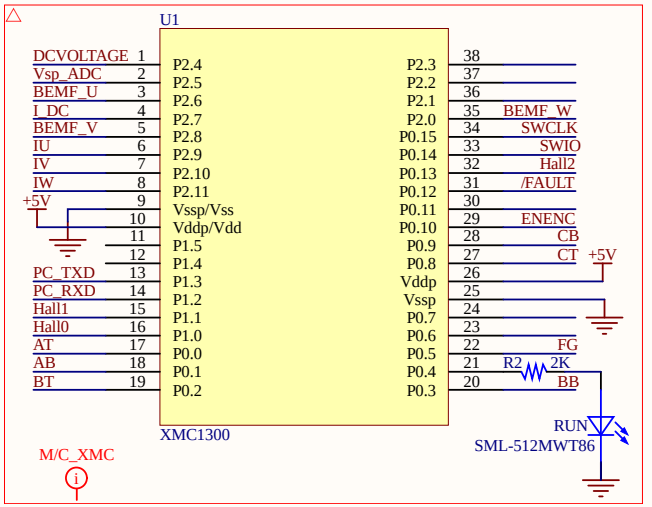

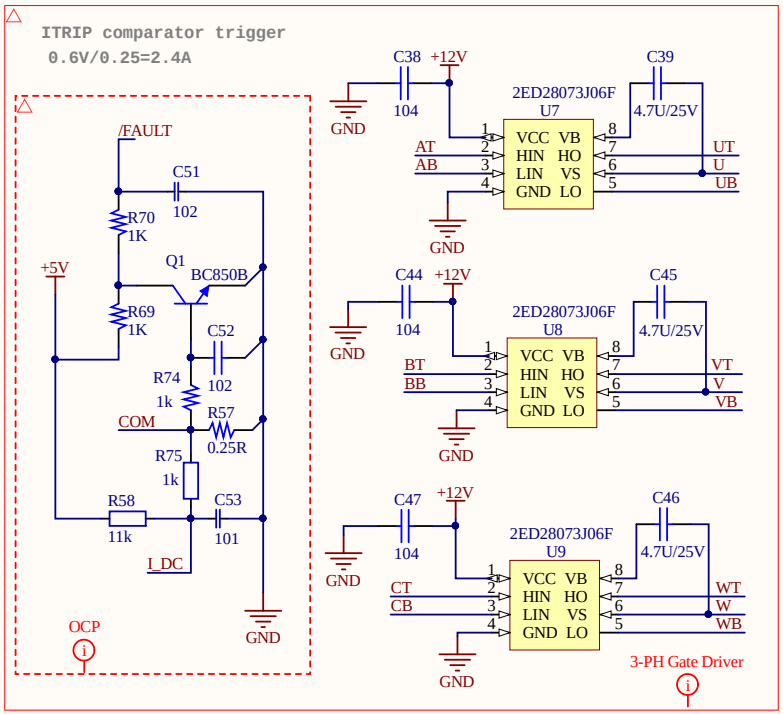

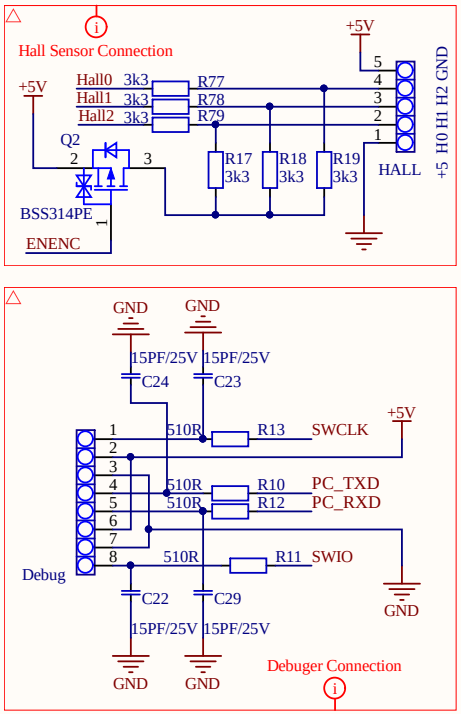

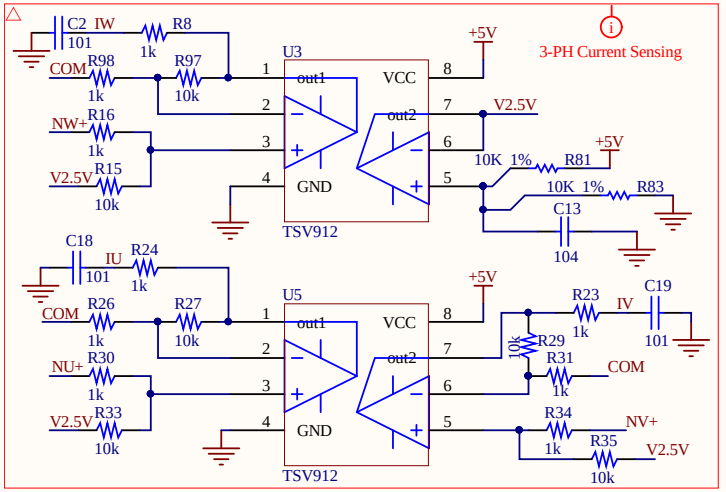

Infineon Technologies AG
Siemensstraße 2, 9500 Villach, Austria

Title	M100002831-EVAL_FAN_XMC_PFD7		
Variant	[No Variations]	Approved	*
Size: A4	Document Name: M100002831-Driver.SchDoc	Rel. <Rel.>	Rev. <Rev.2>
Designer: Eslam Alfawy			
Date: 05.01.2021 Time: 9:10:32 AM		SVN Revision: Not in version control	
© Infineon Technologies AG 2017. All Rights Reserved.		Sheet 2	of 2

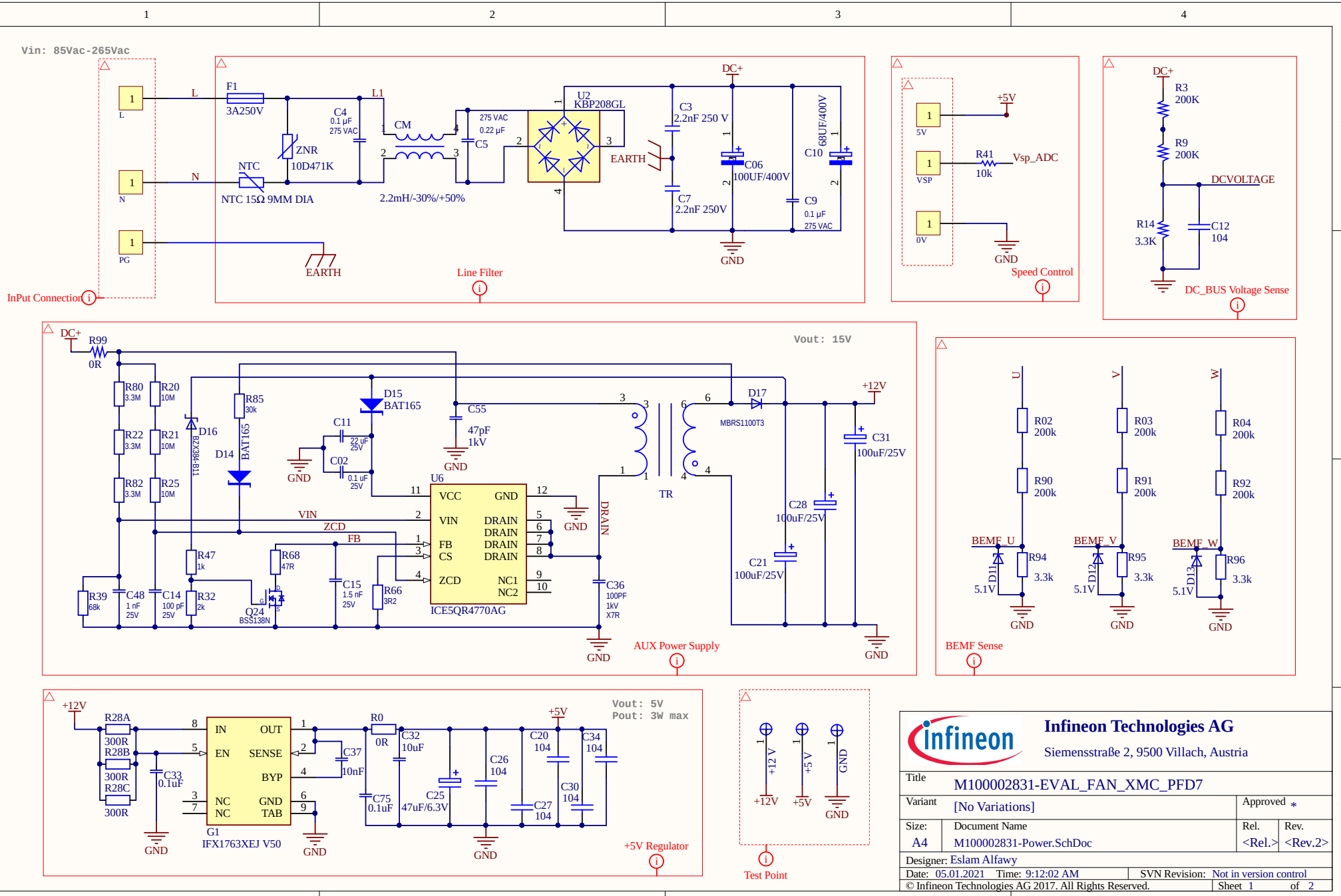
Vin: 85Vac-265Vac
InPut Connection
L
N
PG
F1
3A250V
ZNR
10D471K
NTC
NTC 15Ω 9MM DIA
C4
0.1 µF
275 VAC
CM
2.2mH/-30%/+50%
C5
275 VAC
0.22 µF
U2
KBP208GL
EARTH
C3
2.2nF 250 V
C7
2.2nF 250V
C06
100UF/400V
C10
68UF/400V
C9
0.1 µF
275 VAC
DC+
GND
Line Filter
5V
VSP
0V
+5V
R41
10k
Vsp_ADC
Speed Control
R3
200K
R9
200K
DCVOLTAGE
R14
3.3K
C12
104
DC_BUS Voltage Sense
Vout: 15V
R99
0R
R80
3.3M
R20
10M
R22
3.3M
R21
10M
R82
3.3M
R25
10M
R85
30k
D16
BZX384-B11
D14
BAT165
D15
BAT165
C11
22 uF
25V
C02
0.1 uF
25V
C55
47pF
1kV
U6
VCC
VIN
FB
CS
ZCD
GND
DRAIN
NC1
NC2
ICE5QR4770AG
VIN
ZCD
FB
DRAIN
TR
D17
MBRS1100T3
+12V
C31
100uF/25V
C28
100uF/25V
C21
100uF/25V
C36
100PF
1kV
X7R
R47
1k
R68
47R
R66
3R2
C15
1.5 nF
25V
R39
68k
C48
1 nF
25V
C14
100 pF
25V
R32
2k
Q24
BSS138N
AUX Power Supply
U
V
W
R02
200k
R90
200k
R03
200k
R91
200k
R04
200k
R92
200k
BEMF_U
BEMF_V
BEMF_W
D11
D12
D13
5.1V
R94
3.3k
R95
3.3k
R96
3.3k
BEMF Sense
+12V
R28A
300R
R28B
300R
R28C
300R
C33
0.1uF
IN
EN
NC
NC
OUT
SENSE
BYP
GND
TAB
G1
IFX1763XEJ V50
R0
0R
C37
10nF
C75
0.1uF
C32
10uF
C25
47uF/6.3V
C26
104
C20
104
C27
104
C30
104
C34
104
+5V
Vout: 5V
Pout: 3W max
+5V Regulator
+12V
+5V
GND
Test Point
Infineon Technologies AG
Siemensstraße 2, 9500 Villach, Austria
Title
M100002831-EVAL_FAN_XMC_PFD7
Variant
[No Variations]
Approved
Size
A4
Document Name
M100002831-Power.SchDoc
Rel.
<Rel.>
Rev.
<Rev.2>
Designer: Eslam Alfawy
Date: 05.01.2021 Time: 9:12:02 AM
SVN Revision: Not in version control
© Infineon Technologies AG 2017. All Rights Reserved.
Sheet 1 of 2